The vertical centre of gravity of the load should not exceed what is shown on the capacity plate of the truck (see illustration 1). In most cases the vertical centre of gravity will be 600mm or less if the height of the load is 1200mm or less.

A load that is taller than the standard 1200mm high load will typically have a (VCG) greater than 600mm for which the trucks are rated for.

Special precautions need to be taken when handling loads where the vertical load centre of gravity (VCG) is greater than what is shown on the capacity plate.

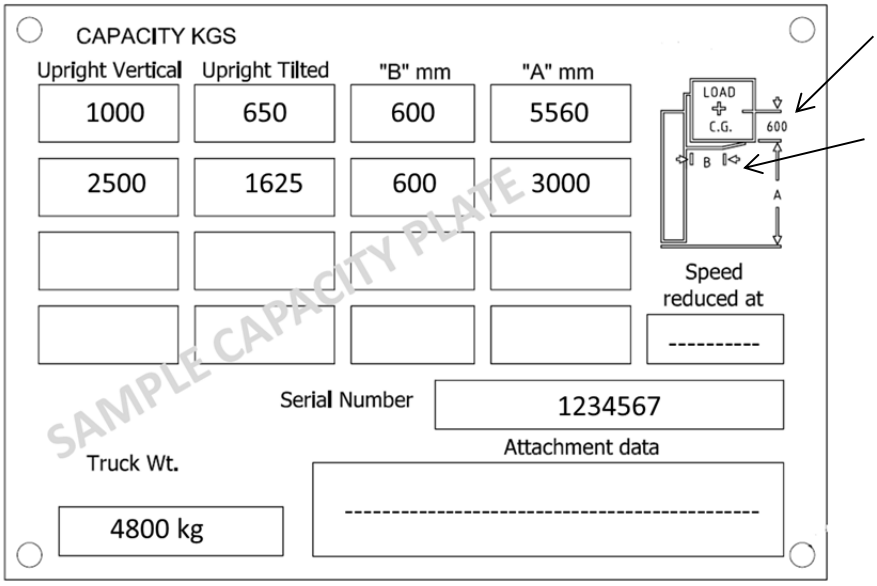

illustration 1.

Note: The capacity ratings provided on lift trucks are based on standard loads measuring 1200mm (w) x 1200mm (l) x 1200mm (h) where both the horizontal and vertical load centres are 600mm (compliant with Australian Standards AS2359 and industry standards).

The site should have a safe system of work in place for these applications and these should be addressed in the Traffic Management Plan (TMP). For additional guidance on TMP refer to AS2359.2.

The following guidelines are recommended for handling loads where the vertical load centre is greater than 600mm:

Transporting

Transporting of loads with a vertical load centre greater than 600mm is allowed with the following conditions:

- total load does not exceed the maximum capacity (kg) as shown on the capacity plate
- for double stack loads the heaviest load should be on the bottom (see illustration 2)
- load is not raised more than 300mm off the ground (see illustration 2)

Additional special precautions cont.

- load is supported, stabilised and secured
- a risk assessment (including traffic management plan) has been developed for this practice
- drive, steer and brake in a smooth manner
- Be aware that visibility may be affected when driving in forks first direction and take appropriate caution of your surroundings. AS2359.2 – 2013 Clause 3.6 (f) states the following *"When carrying a bulky load which blocks or restricts forward visibility the truck shall be driven with the load trailing and if necessary under the direction of a person who has visibility in the direction of travel, unless safe work practises allow otherwise."*
- if load is segmented (not secured e.g. not shrink-wrapped) ensure that the load backrest is of a sufficient width and height to minimise loose objects falling onto operator.
- Where sideshift is fitted, sideshift shall be centralised.

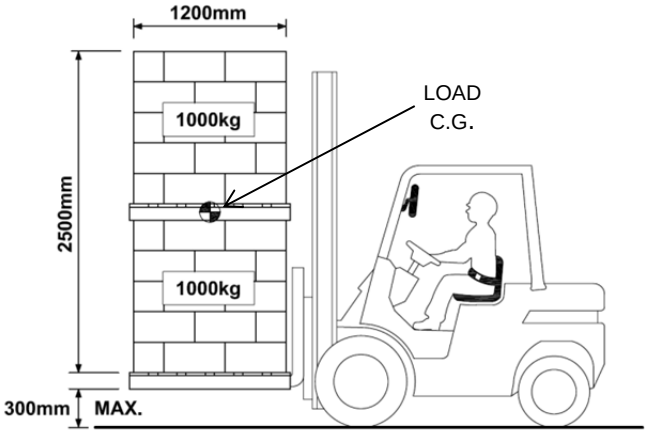

illustration 2.

NOTE: In the transport position only the mast can be used as an extension of the load backrest for unit loads.

Illustration 2 shows an example where the vertical load centre is greater than 600mm.

Placing load in Racking or Stacking

For loads that need to be put away in racking or tall stacks where the load centre is greater than 600mm the truck will need to be de-rated. Contact manufacturer for new capacity plates.

WARNING: truck must be operated on firm level ground when stacking, AS2359 .2 - 2013 definition of a Hard, flat, level surface is;

"A surface that is plane to within 5 mm per metre, with grade in any direction not exceeding 2% and able to support the wheel loading of the heaviest truck and load likely to use it without noticeable deflection."